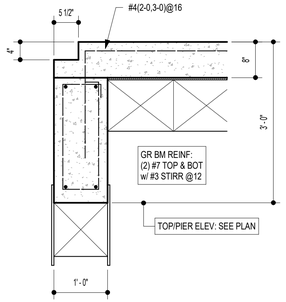

1 SECTION
3/4" = 1'-0"

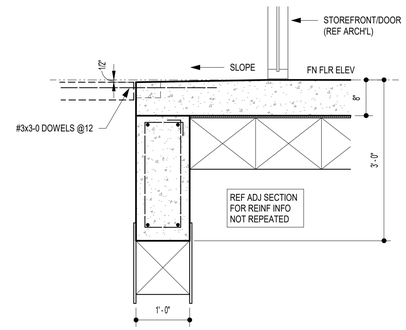

2 SECTION
3/4" = 1'-0"

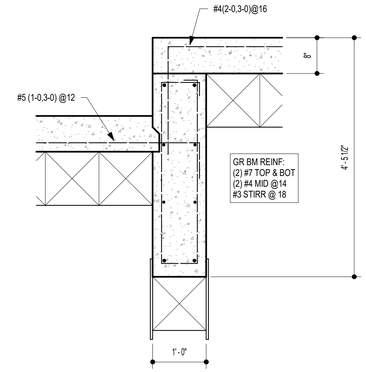

3 SECTION
3/4" = 1'-0"

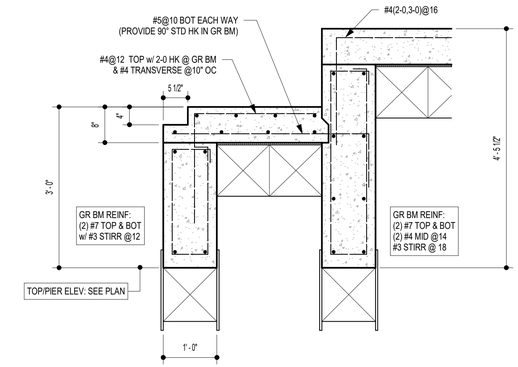

4 SECTION
3/4" = 1'-0"

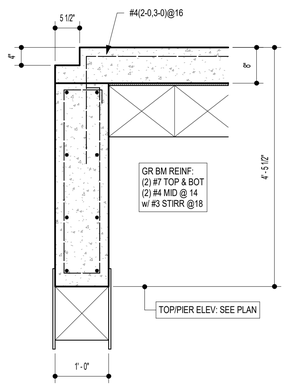

5 SECTION
3/4" = 1'-0"

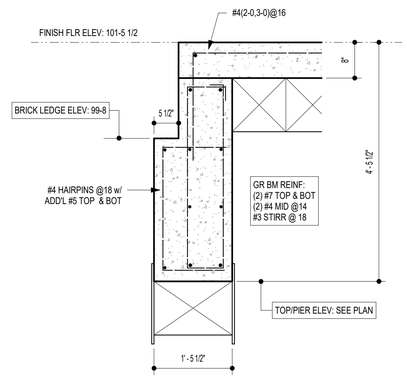

6 SECTION
3/4" = 1'-0"

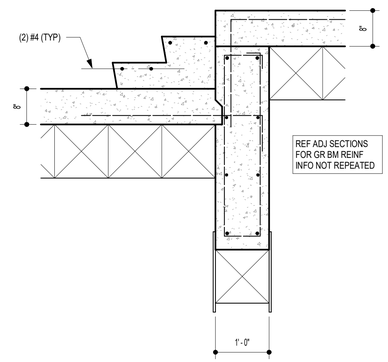

7 SECTION
3/4" = 1'-0"

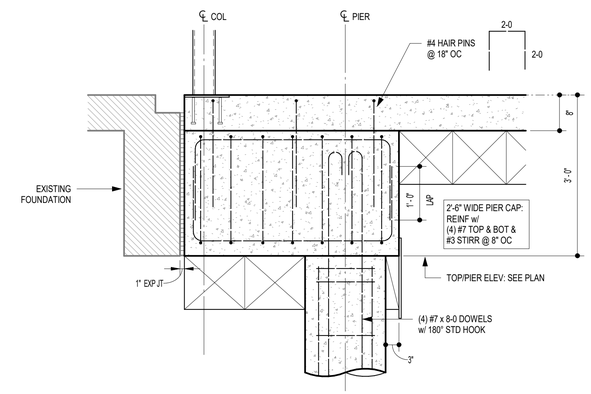

8 SECTION
3/4" = 1'-0"

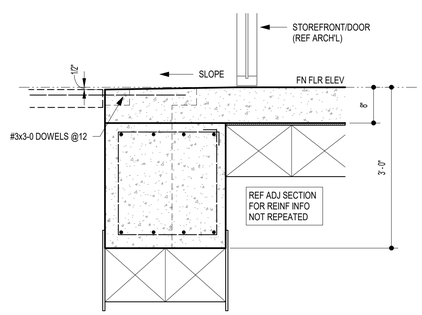

9 SECTION
3/4" = 1'-0"

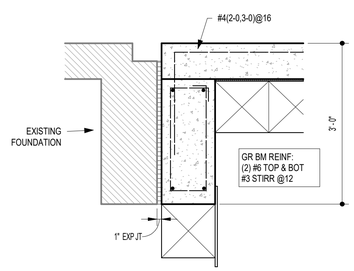

10 SECTION
3/4" = 1'-0"

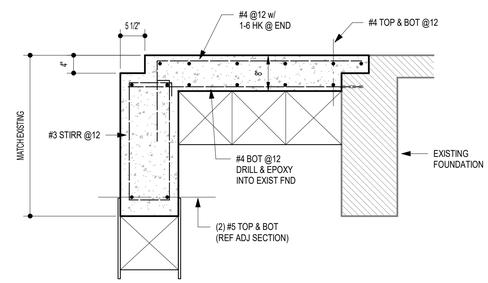

11 SECTION
3/4" = 1'-0"

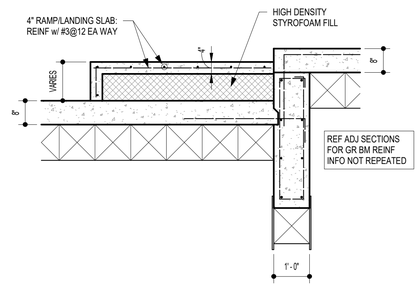

12 SECTION
1/2" = 1'-0"

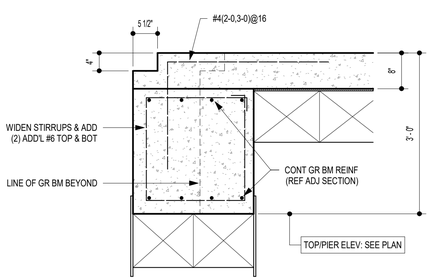

13 SECTION
3/4" = 1'-0"

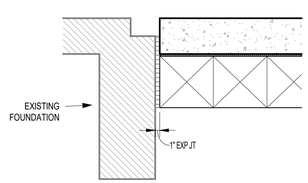

14 SECTION
3/4" = 1'-0"

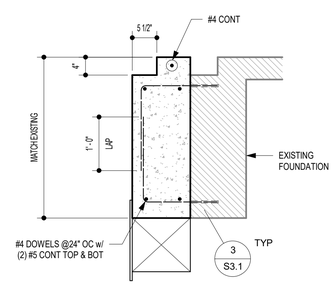

15 SECTION
3/4" = 1'-0"

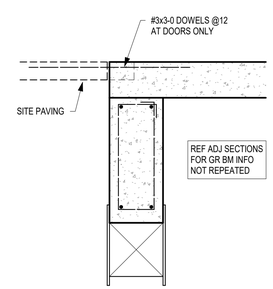

16 SECTION
3/4" = 1'-0"

MANSFIELD
TEXAS

APPROVED
Reviewed for Code Compliance
ProjectName: C2-24-02038 & CR-24-00667
Date: 4/25/2024
Approved plans in no way excludes items that may be found in the field and shall not be construed to be a permit or approval of any violation of any code provision.

ARCHITECTURE
SCOTT MARTSOLF - ARCHITECT

815 Daggett Avenue
Fort Worth, Texas 76104

Phone: (817) 820-0005

ST. JUDE CATHOLIC CHURCH

PARISH HALL REMODEL & CONNECTOR BUILDING

500 E DALLAS ST.
MANSFIELD, TX 76063

HnH ENGINEERING, INC.
105 Sproles Drive Fort Worth, Texas 76126
TBPE Firm No. F-13825 (817) 713-4977

PERMIT SET

Drawing Title:
FOUNDATION DETAILS

Project No.	Date:
2023.297	1/12/2024

STATE OF TEXAS
WILL A HERBERT
92824
LICENSED
PROFESSIONAL ENGINEER
1.12.24

Sheet No.
S3.2