LIGHTING CONTROL DEVICE SCHEDULE

$	LINE VOLTAGE TOGGLE SWITCH
$3	LINE VOLTAGE 3-WAY TOGGLE SWITCH
$4	LINE VOLTAGE 4-WAY TOGGLE SWITCH
$D	LINE VOLTAGE SLIDE DIMMER SWITCH WITH "ON/OFF" BUTTON
$T	LINE VOLTAGE TIMER SWITCH
$O	WALL MOUNTED LINE VOLTAGE OCCUPANCY SENSOR, 3 BUTTON (ON/OFF, RAISE/LOWER) DIMMING SENSOR, PROGRAM TO AUTOMATIC 50% "ON", AUTOMATIC "OFF" AFTER 30 MINUTES, DUAL TECHNOLOGY UNLESS OTHERWISE NOTED.
$V	WALL MOUNTED LINE VOLTAGE VACANCY SENSOR (ON/OFF). PROGRAM TO AUTOMATIC 100% "ON", AUTOMATIC "OFF" AFTER 30 MINUTES, DUAL TECHNOLOGY UNLESS OTHERWISE NOTED.
$F	WALL MOUNTED LINE VOLTAGE VACANCY SENSOR PER ZONE (ON/OFF) SENSOR. PROGRAM TO AUTOMATIC 100% "ON", AUTOMATIC "OFF" AFTER 30 MINUTES, DUAL TECHNOLOGY UNLESS OTHERWISE NOTED.
$O	WALL MOUNTED LOW VOLTAGE DIGITAL BUTTON, 3-BUTTON PER ZONE (ON/OFF, RAISE/LOWER). PROGRAM TO AUTOMATIC 50% "ON", AUTOMATIC "OFF" AFTER 30 MINUTES, DUAL TECHNOLOGY OCCUPANCY SENSORS AS SHOWN IN PLAN VIEW. LOWER CASE LETTERS ADJACENT TO SWITCH INDICATED ZONE.
$V	WALL MOUNTED LOW VOLTAGE DIGITAL BUTTON PER ZONE (ON/OFF). PROGRAM TO AUTOMATIC 50% "ON", AUTOMATIC "OFF" AFTER 30 MINUTES, DUAL TECHNOLOGY VACANCY SENSORS AS SHOWN IN PLAN VIEW. LOWER CASE LETTERS ADJACENT TO SWITCH INDICATED ZONE.
$F	WALL MOUNTED LOW VOLTAGE DIGITAL BUTTON PER ZONE (ON/OFF). PROGRAM TO AUTOMATIC 100% "ON", AUTOMATIC "OFF" AFTER 30 MINUTES, DUAL TECHNOLOGY VACANCY SENSORS AS SHOWN IN PLAN VIEW. LOWER CASE LETTERS ADJACENT TO SWITCH INDICATED ZONE.
$T	NETWORK TIME BASED DIGITAL CONTROL. SCHEDULE PROGRAMMING PER OWNERS DIRECTIVE. WALL MOUNTED LOW VOLTAGE DIGITAL BUTTON PER ZONE (ON/OFF). ALL BUTTONS TO FUNCTION DURING OPERATIONAL TIME AS "ON/OFF". AFTER HOURS BUTTONS ARE TO PROVIDE SAME FUNCTION BUT BE LIMITED TO 2-HOUR MAXIMUM "ON".
DT PI US	CEILING MOUNTED DIGITAL OCCUPANCY SENSOR CAMPATIBLE WITH DIGITAL BUTTON CONTROL SHOWN. "DT" = DUAL TECHNOLOGY "PI" = PASSIVE INFRARED "US" = ULTRASONIC
DT PI US	WALL MOUNTED DIGITAL OCCUPANCY SENSOR CAMPATIBLE WITH DIGITAL BUTTON CONTROL SHOWN. "DT" = DUAL TECHNOLOGY "PI" = PASSIVE INFRARED "US" = ULTRASONIC

LIGHTING CONTROLS WITH RECEPTACLE OCCUPANCY CONTROLS

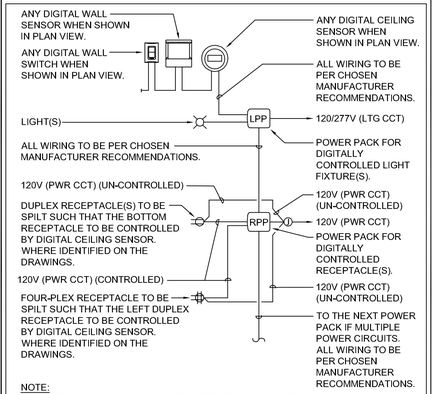

NOTE:
1. PROVIDE A LABEL ON THE LIGHTING POWER PACK AS 'LPP'.
2. PROVIDE A LABEL ON THE RECEPTACLE POWER PACK AS 'RPP - CCT #'.
3. PROVIDE A LABEL ON RECEPTACLE(S) COVERPLATE AS 'EC' (ENERGY CODE) IN ACCORDANCE WITH NEC 406.3 (E).
4. RECEPTACLE CONTROLS PER IECC 2021 C405.11.

PARTIAL ENERGY CODE REQUIREMENTS

GENERAL ENERGY CODE REQUIREMENTS:

ALL AREAS LISTED BELOW ARE TO HAVE OCCUPANCY SENSOR CONTROLS:
LOUNGES.
LUNCH OR BREAK ROOMS.
PRIVATE OFFICE.
RESTROOMS.
STORAGE ROOMS.
JANITOR ROOMS.
OTHER ROOMS WITH 300 SQ. FT. OR LESS.
WAREHOUSES (WAREHOUSE TO BE SENSORED BY AISLEWAY).

ALL SENSORS TO FUNCTION MANUAL ON AUTOMATIC OFF. AUTOMATIC ON MAY BE USED IF ON LEVEL IS LESS THAN 50% OF THE LIGHTING AUTOMATIC ON TO 100% IS ALLOWED FOR PUBLIC CORRIDORS. LOBBIES AND SIMILAR PUBLIC USE ONLY AREAS.

AREAS NOT EXEMPTED FROM THE BASE CONTROLS SHALL HAVE REDUCTION CONTROLS LOCATED IN THE SPACE FOR MINIMUM 50% REDUCTION BY OCCUPANCY. LIGHTING REDUCTION IS NOT REQUIRED FOR ROOMS WITH ONLY ONE LIGHT FIXTURE, ROOMS LESS THAN .6 W/SQ. FT. CORRIDORS, EQUIPMENT ROOM, PUBLIC LOBBIES.

AREAS THAT HAVE SPECIAL EXEMPTIONS THAT MUST BE EVALUATED ON A CASE BY CASE BASIS.

GENERAL LIGHTING CONTROLS NOTE NOTES AND EXAMPLES

LIGHTING CONTROL GENERAL NOTES:

1. SENSOR LOCATIONS ARE MINIMUMS. CONTRACTOR SHALL PROVIDE FOR A MINIMUM OF 10% ADDITIONAL DEVICES TO COVER DARK SPOTS DISCOVERED DURING CONSTRUCTION FROM FIELD INSTALLED OBSTRUCTIONS. CONTRACTOR SHALL ALSO ALLOW FOR A MOVE OF UP TO 5'-0" IN ANY DIRECTION FOR ALL SENSORS, AT NO ADDITIONAL COST TO THE OWNER, TO ALLOW FOR FIELD ADJUSTMENT OF SENSOR PLACEMENTS TO ACHIEVE OPTIMUM PERFORMANCE.
2. INSTALLATION SHALL BE IN ACCORDANCE WITH MANUFACTURER'S REQUIREMENTS.
3. CONTRACTOR SHALL PROVIDE A MINIMUM OF (2) SITE VISITS BY FACTORY TRAINED PERSONNEL TO ADJUST SENSORS AND TRAIN THE OWNER ON USE AND MAINTENANCE OF LIGHTING CONTROL COMPONENTS.
4. AFTER COMMISSIONING LIGHTING CONTROLS, CONTRACTOR SHALL PROVIDE A WRITTEN TEST REPORT INDICATING THAT ALL LIGHTING CONTROL SYSTEMS HAVE BEEN COMMISSIONED, TESTED AND FOUND TO BE FUNCTIONING IN ACCORDANCE WITH CONTRACT DOCUMENT AND CODE REQUIREMENTS. CONTRACTOR SHALL ENSURE THAT CONTROL HARDWARE AND SOFTWARE ARE CALIBRATED, ADJUSTED, PROGRAMMED AND IN PROPER WORKING CONDITION IN ACCORDANCE WITH THE CONTRACT DOCUMENTS, MANUFACTURER'S INSTRUCTIONS AND CODE REQUIREMENTS. FUNCTIONAL TESTING SHALL BE IN ACCORDANCE WITH IECC SECTIONS C408.3.1.1/2 FOR THE APPLICABLE CONTROL TYPES.

GENERAL LIGHTING EXAMPLES:

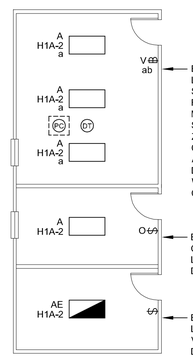

EXAMPLE SHOWS ROOM WITH (3) TYPE "A" LIGHT FIXTURES ON CIRCUIT EXAMPLE SHOWS ROOM WITH (3) TYPE "A" LIGHT FIXTURES ON CIRCUIT H1A-2. CONTROL METHOD IS DIGITAL VACANCY CEILING SENSOR WITH A 2-ZONE SWITCH "BV" FOR ZONES "a" AND "b". WINDOW DAYLIGHTING CONTROL IS REQUIRED BY "DR" SYMBOL AND PHOTOCELL SENSOR "PC" PLACED IN DAYLIGHTING ZONE. ROOM IS CONTROLLED WITH (1) TYPE "DT" DUAL TECHNOLOGY OCCUPANCY SENSOR.

EXAMPLE SHOWS LINE VOLTAGE OCCUPANCY SENSOR WITH (1) TYPE "A" LIGHT FIXTURE ON CIRCUIT H1A-2. DAYLIGHTING IS EXEMPT.

EXAMPLE SHOWS EMERGENCY BACKUP LIGHTING FIXTURE TYPE "AE" WITH LINE VOLTAGE SWITCH ONLY FOR ROOMS DEEMED SAFETY RELATED, WHERE AUTOMATIC LIGHTING CONTROLS WOULD PRESENT DANGER TO OCCUPANTS. ROOM WITH (1) TYPE "A" LIGHT FIXTURE ON CIRCUIT H1A-2.

LIGHTING CONTROLS

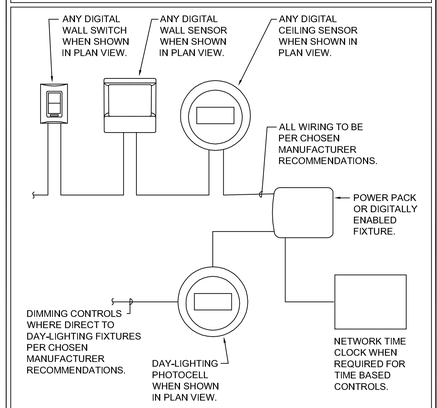

GENERAL NOTES APPLY TO ALL:

SENSOR LOCATIONS ARE MINIMUMS, CONTRACTOR TO PROVIDE FOR A MINIMUM OF 10% ADDITIONAL DEVICES TO COVER DARK SPOTS DISCOVERED DURING CONSTRUCTION FROM FIELD INSTALLED OBSTRUCTIONS. CONTRACTOR SHALL ALSO ALLOW FOR A MOVE OF UP TO 5'-0" IN ANY DIRECTION FOR ALL SENSORS AT NO ADDITIONAL COST TO THE OWNER. TO ALLOW FIELD ADJUSTMENTS OD SENSOR PLACEMENTS TO ACHIEVE OPTIMUM PERFORMANCE.

CONTRACTOR SHALL PROVIDE A MINIMUM OF 2 SITE VISITS BY FACTORY TRAINED PERSONNEL TO ADJUST AND TRAIN THE OWNER ON USE AND MAINTENANCE OF ALL LIGHTING CONTROL COMPONENTS.

NOTE:
ALL POWER PACKS TO BE MOUNTED ABOVE CEILING NEAREST THE FIRST WALL SWITCH SERVING THE ASSOCIATED ROOM. PLAN VIEW SHOWS QUANTITIES OF ZONES REQUIRED. MANUFACTURER MAY COMBINE POWER PACK WHERE POSSIBLE INTO MULLTIZONE POWER PACKS.

ALL EMERGENCY BATTERY PACK FIXTURES ARE TO TURN "ON/OFF" WITH ASSOCIATED ROOM, BUT OVERRIDE TO "ON" POSITION OF POWER IS LOST.

ALL EXIT LIGHTING AND BATTERY PACK ONLY FIXTURES ARE TO BE WIRED TO UN-SWITCHED LEG OF BRANCH CIRCUITS SHOWN FOR CONSTANT POWER.

"DLC" SEQUENCE OF OPERATION:
SENSOR SHALL TURN LIGHTS "OFF" IF ROOM IS VACANT FOR MORE THAN 30 MINUTES.

SENSOR WILL TURN LIGHTS "ON" WHEN WALL SWITCH IS ACTIVATED.

EACH ZONE INDICATED REQUIRES 1 1BUTTON FOR "ON/OFF" CONTROLS.

DESIGN REFERENCE:
DETAILS IS GENERIC IN NATURE. PLAN VIEWS WILL INDICATE NUMBER OF ZONES WITH NUMBER / TYPE OF POWER PACK ZONES REQUIRED. PLAN VIEW WILL INDICATE LOCATION OF DIGITAL WALL SWITCHES WITH THE NUMBER OF BUTTONS REQUIRED. EACH MANUFACTURER IS DIFFERENT IN DEVICES AVAILABLE AND WIRING. ACCEPTABLE MANUFACTURERS ARE WATT STOPPER, LUTON AND ACUITY. OTHER WILL BE CONSIDERED WITH PRE-APPROVAL PRIOR TO BIDDING.

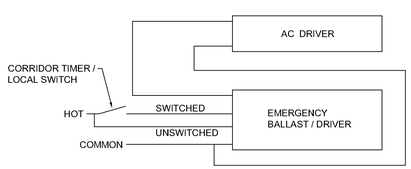

NOTE:
EMERGENCY DRIVER MUST BE FED FROM SAME BRANCH CIRCUIT AS AC DRIVER.

1 EMERGENCY BALLAST / DRIVER WIRING DIAGRAM
Not To Scale

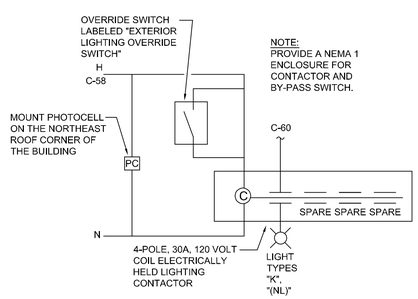

2 EXTERIOR LIGHTING CONTACTOR WIRING DIAGRAM
Not To Scale

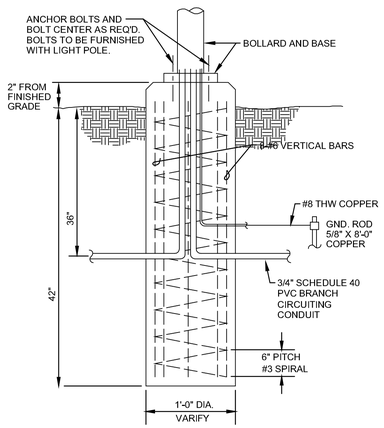

NOTE:
1. FOUNDATION MATERIAL IN WHICH CONCRETE PIER IS TO BE PLACED ADJACENT TO STRUCTURES AND IN BACKFILLED MATERIAL SHALL BE COMPACTED TO 95% OF STANDARD PROCTOR DENSITY UNLESS OTHERWISE NOTED OR SPECIFIED.
2. FIELD VERIFY EXISTING LIGHT POLE CONCRETE PIER DIAMETER AND ANCHOR BOLTS PATTERN PRIOR TO INSTALLING THE NEW LIGHT POLE BASE.
3. PROVIDE 3/4"C.- 2 # 10, 1# 10G THRU-OUT THE ENTIRE LIGHTING BRANCH CIRCUITING.

3 TYPICAL BOLLARD BASE DETAIL
Not To Scale

ARCHITECTURE
SCOTT MARTSOLF - ARCHITECT

815 Daggett Avenue
Fort Worth, Texas 76104

Phone: (817) 820-0005

ST. JUDE CATHOLIC CHURCH

PARISH HALL REMODEL & CONNECTOR BUILDING

500 E DALLAS ST.
MANSFIELD, TX 76063

BID SET

Drawing Title:
LIGHTING CONTROLS, SCHEDULES AND DETAILS

Project No.	Date:
2307	12/20/2023
	Sheet No.
	E0.3

STATE OF TEXAS
12/20/2023
RENE A. CULROSS
71739
LICENSED
PROFESSIONAL ENGINEER
2347.1219.6510

MEP Consultant
Rene' A. Culross
Rene' A. Culross, P.E., PLLC
1820 Hunting Green Drive
Fort Worth, TX 76134
817-798-6642
raculross@gmail.com
F-12230

C:\Work\Projects\23-47 St Jude CC - Parish Hall Addn\Elec\2347-E03.dwg 12/21/23 10:39:42 Rene's ASUS