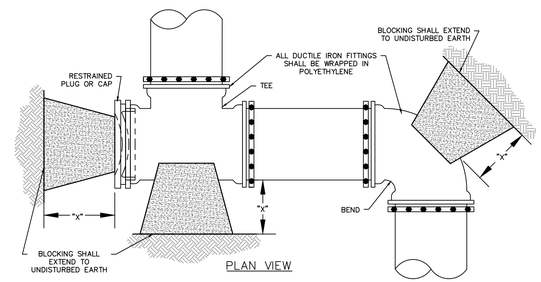

NOTES:
1. THRUST BLOCKING AREAS SHOWN ARE BASED ON:
   1.1. 225 PSI TEST PRESSURE
   1.2. 3,000 PSF HORIZONTAL OR LATERAL BEARING PRESSURE FOR ACCEPTABLE SOILS
   1.3. MINIMUM COVER OF 42"
   1.4. A SAFETY FACTOR OF 1.5.
2. THE ENGINEER SHALL PROVIDE A SEPARATE BLOCKING TABLE WHEN THE CONDITIONS DO NOT MEET THE ABOVE ASSUMPTIONS.
3. THE CONTRACTOR IS REQUIRED TO PROVIDE THRUST RESTRAINT BY MEANS OF THRUST BLOCKING FOR ALL PIPES. THIS ITEM SHALL BE CONSIDERED SUBSIDIARY TO THE VARIOUS ITEMS BID.
4. ALL MJ FITTINGS SHALL BE ADDITIONALLY RESTRAINED WITH RETAINER GLANDS.
5. BLOCKING FOR WATER LINES LARGER THAN 24" SHALL BE DESIGNED FOR THE SPECIFIC LOCATION AND SHOWN ON THE DRAWINGS.
6. ALL DUCTILE IRON FITTINGS SHALL BE WRAPPED IN POLYETHYLENE ENCASEMENT PRIOR TO PLACING OF BLOCKING.

HORIZONTAL THRUST BLOCKING TABLE

PIPE SIZE	"X" DIM.**	PLUGS, TEES, DEAD-ENDS	90° BENDS	45° BENDS	22.5° BENDS	11.25° BENDS
		MIN. AREA (SF)	MIN. AREA (SF)	MIN. AREA (SF)	MIN. AREA (SF)	MIN. AREA (SF)
6"	1'-6"	4.00*	4.50	4.00*	4.00*	4.00*
8"	1'-6"	5.65	8.00	4.33	4.00*	4.00*
10"	1'-6"	8.84	12.50	6.76	4.00*	4.00*
12"	1'-6"	12.72	17.99	9.74	4.96	4.00*
16"	2'-0"	22.62	31.99	17.31	8.83	4.43
20"	2'-0"	35.34	49.98	27.05	13.79	6.93
24"	2'-0"	50.89	71.97	38.95	19.86	9.98

*MINIMUM THRUST BLOCKING SURFACE AREA SHALL BE 4 SQUARE FEET.
**DIMENSION "X" TO BE A MINIMUM OF ONE FOOT AND SIX INCHES, BUT IS TO BE INCREASED WHERE NECESSARY TO PROVIDE BEARING AGAINST UNDISTURBED TRENCH WALL.

3 HORIZONTAL THRUST BLOCKING
NOT TO SCALE

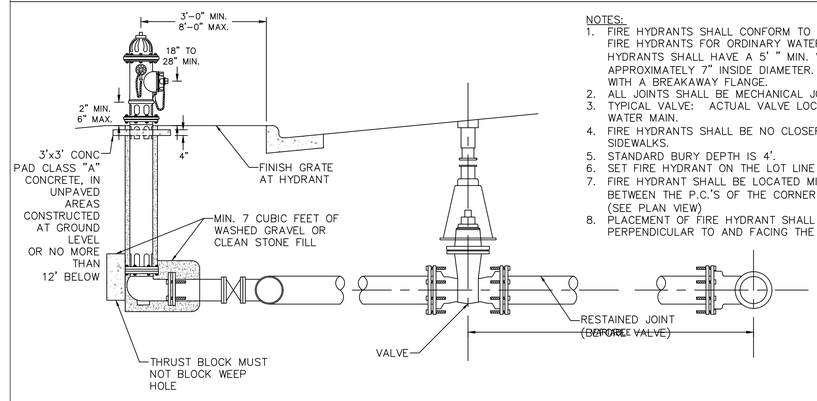

NOTES:
1. FIRE HYDRANTS SHALL CONFORM TO AWWA STANDARD SPECIFICATIONS FOR FIRE HYDRANTS FOR ORDINARY WATER WORKS SERVICE, C-502. FIRE HYDRANTS SHALL HAVE A 5' " MIN. VALVE OPENING AND A BARREL APPROXIMATELY 7" INSIDE DIAMETER. ALL HYDRANTS SHALL BE EQUIPPED WITH A BREAKAWAY FLANGE.
2. ALL JOINTS SHALL BE MECHANICAL JOINTS.
3. TYPICAL VALVE: ACTUAL VALVE LOCATIONS WILL DEPEND ON LOCATION OF WATER MAIN.
4. FIRE HYDRANTS SHALL BE NO CLOSER THAN 18" TO EXISTING OR PROPOSED SIDEWALKS.
5. STANDARD BURY DEPTH IS 4'.
6. SET FIRE HYDRANT ON THE LOT LINE EXTENDED WHEN POSSIBLE.
7. FIRE HYDRANT SHALL BE LOCATED MINIMUM 1' OUTSIDE OF THE AREA BETWEEN THE P.C.'S OF THE CORNER TURNING RADII AT INTERSECTIONS. (SEE PLAN VIEW)
8. PLACEMENT OF FIRE HYDRANT SHALL BE WHERE PUMPER NOZZLE IS PERPENDICULAR TO AND FACING THE NEAREST CURB.

2 FIRE HYDRANT INSTALLATION
NOT TO SCALE

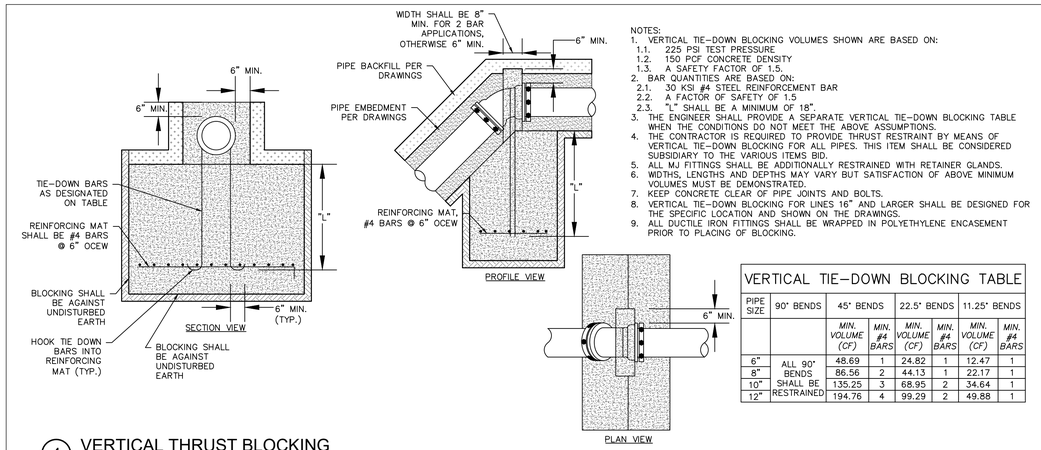

NOTES:
1. VERTICAL TIE-DOWN BLOCKING VOLUMES SHOWN ARE BASED ON:
   1.1. 225 PSI TEST PRESSURE
   1.2. 150 PCF CONCRETE DENSITY
   1.3. A SAFETY FACTOR OF 1.5.
2. BAR QUANTITIES ARE BASED ON:
   2.1. 30 KSI #4 STEEL REINFORCEMENT BAR
   2.2. A FACTOR OF SAFETY OF 1.5
   2.3. "L" SHALL BE A MINIMUM OF 18".
3. THE ENGINEER SHALL PROVIDE A SEPARATE VERTICAL TIE-DOWN BLOCKING TABLE WHEN THE CONDITIONS DO NOT MEET THE ABOVE ASSUMPTIONS.
4. THE CONTRACTOR IS REQUIRED TO PROVIDE THRUST RESTRAINT BY MEANS OF VERTICAL TIE-DOWN BLOCKING FOR ALL PIPES. THIS ITEM SHALL BE CONSIDERED SUBSIDIARY TO THE VARIOUS ITEMS BID.
5. ALL MJ FITTINGS SHALL BE ADDITIONALLY RESTRAINED WITH RETAINER GLANDS.
6. WIDTHS, LENGTHS AND DEPTHS MAY VARY BUT SATISFACTION OF ABOVE MINIMUM VOLUMES MUST BE DEMONSTRATED.
7. KEEP CONCRETE CLEAR OF PIPE JOINTS AND BOLTS.
8. VERTICAL TIE-DOWN BLOCKING FOR LINES 16" AND LARGER SHALL BE DESIGNED FOR THE SPECIFIC LOCATION AND SHOWN ON THE DRAWINGS.
9. ALL DUCTILE IRON FITTINGS SHALL BE WRAPPED IN POLYETHYLENE ENCASEMENT PRIOR TO PLACING OF BLOCKING.

VERTICAL TIE-DOWN BLOCKING TABLE

PIPE SIZE	90° BENDS	45° BENDS		22.5° BENDS		11.25° BENDS	
		MIN. VOLUME (CF)	MIN. #4 BARS	MIN. VOLUME (CF)	MIN. #4 BARS	MIN. VOLUME (CF)	MIN. #4 BARS
6"	ALL 90° BENDS SHALL BE RESTRAINED	48.69	1	24.82	1	12.47	1
8"		86.56	2	44.13	1	22.17	1
10"		135.25	3	68.95	2	34.64	1
12"		194.76	4	99.29	2	49.88	1

4 VERTICAL THRUST BLOCKING
NOT TO SCALE

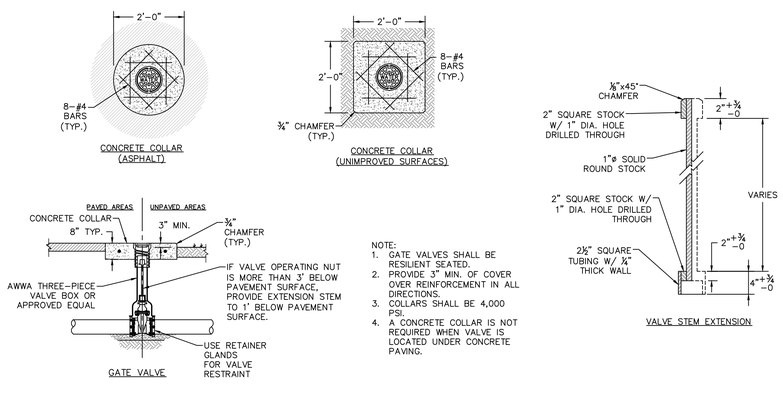

NOTE:
1. GATE VALVES SHALL BE RESILIENT SEATED.
2. PROVIDE 3" MIN. OF COVER OVER REINFORCEMENT IN ALL DIRECTIONS.
3. COLLARS SHALL BE 4,000 PSI.
4. A CONCRETE COLLAR IS NOT REQUIRED WHEN VALVE IS LOCATED UNDER CONCRETE PAVING.

NOTE:
1. 1" ROUND SOLID BAR & 2" SQUARE PER ASTM A-108-81. SAE 1020, COLD DRAWN OR BETTER.
2. 2-½" SQUARE TUBING PER ASTM A-512-79, SAE 1020, COLD DRAWN OR BETTER.
3. ALL WELDS SHALL COMPLY WITH A.W.S. CODE FOR PROCEDURE, APPEARANCE AND QUALITY OF WELDS.

1 STANDARD WATER DISTRIBUTION GATE VALVE & BOX
NOT TO SCALE

TERESA OF CALCUTTA CATHOLIC CHURCH
FORT WORTH, TEXAS
ST. TEL
WATER DETAILS

mma
civil engineering surveying landscape architecture planning
tbpels registration number: f - 2759
tbpels registration/license number: 10088000
519 east border
arlington, texas 76010
817-469-1671
fax: 817-274-8757
www.mmatexas.com

THIS DOCUMENT IS RELEASED FOR THE PURPOSES OF REVIEW UNDER THE AUTHORITY OF VALERIE ARRUDA, P.E. NO. 151600 ON 2/16/2024 AND IS NOT TO BE USED FOR CONSTRUCTION, BIDDING OR PERMIT PURPOSES.

PROJECT NUMBER:	3788-00-01
PROJECT MANAGER:	R. CRONIN
DRAWN BY:	G. SANCHEZ
CHECKED BY:	V. ARRUDA
ISSUE DATE:	2/16/2024

REV.	DATE	DESCRIP.	BY

SHEET CONTENT:

WATER DETAILS

SHEET NO:

C11.4

COPYRIGHT © 2024 MMA, INC.

PLOTTED BY: GABRIE SANCHEZ DATE: 2/16/2024 4:14 PM PATH: P:\3788-00-01\700 Land Development\703 Construction Documents\Design\Plot Sheets\CONSTRUCTION DETAILS.dwg